MEET YOUR TERABOT®

Affordable | Quality | Industrial | Large-Scale | Hand-Crafted

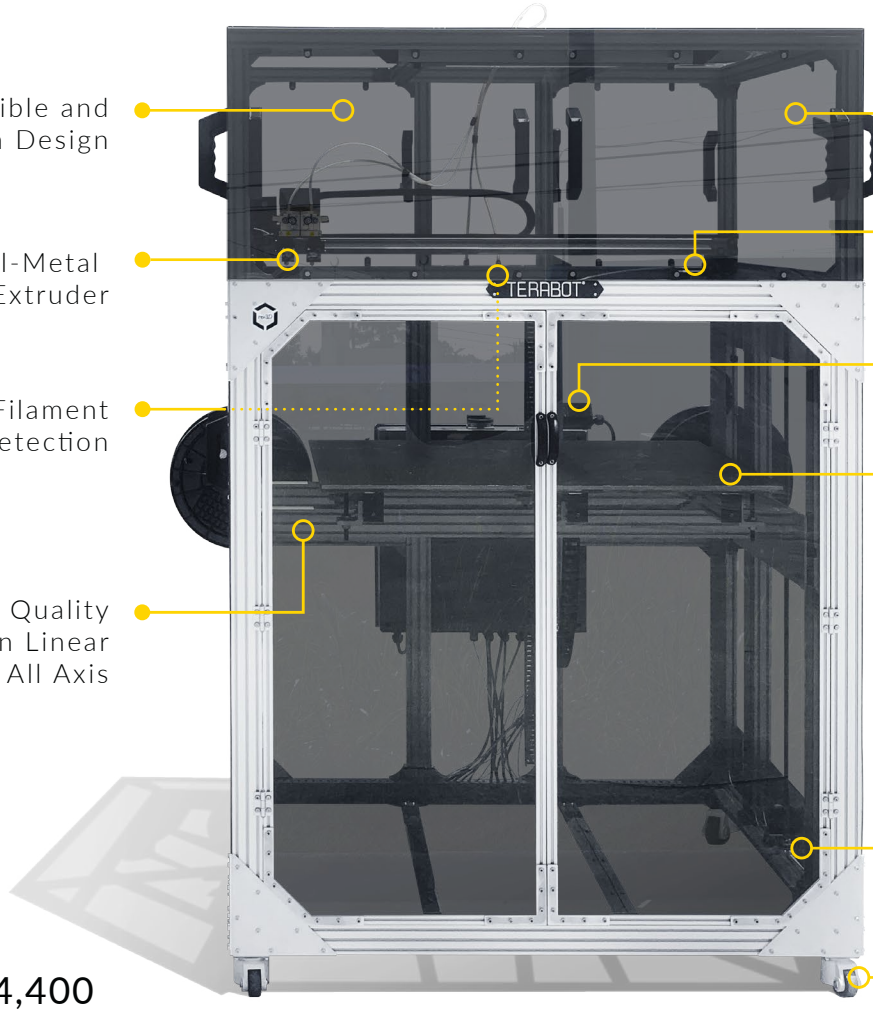

Accessible and Open Design

All-Metal Dual Extruder

Out of Filament Detection

High Quality Precision Linear Rails on All Axis

Enclosure

LED Light Strip

Integrated Viki 2.0 LCD Printing Control

Heated Bed with PRINTinZ

Limit Switches

Leveling Caster Wheels

PRICE $34,400

BUILD VOLUME 915 X 915 X 1,000 MM

3D Print at the Human Scale

Industrial 3D printing is now affordable. The massive print volume starts at 30X larger than desktop 3D printers, at a fraction of the cost of industrial systems.

For High-Strength Materials

Print with thermoplastics that melt below 320°C, Terabot's all-metal hot end opens the door to a wider variety of 3D printing materials, including high-strength & heat-resistant plastic filaments.

Modular, Lifetime Construction

Free from the constraints of product versioning, the Terabot platform enables user upgrades & customization. No machine will fall behind with new features available as add-on packages.

1100 Hercules Ave, Suite 220, Houston TX 77058 | www.re3d.org | sales@re3d.org | 512.730.0033 | Assembled in the USA

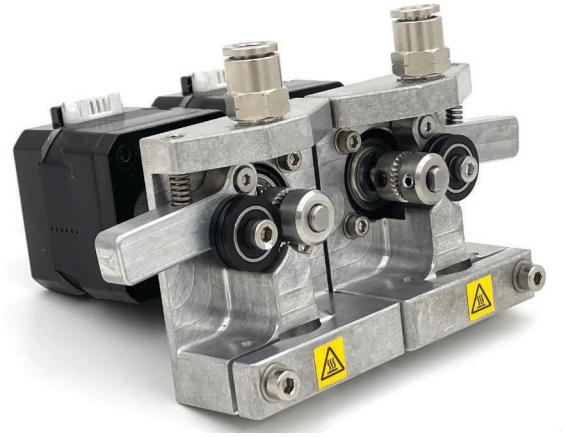

Full Service Solutions

Design & Research Focused on Your Needs

re:3D is ready to assist you with your industrial large-scale 3D printing needs. Our team is experienced in fabricating built-to-spec modified hardware for specialized print requests and available to support material selection, design, contract printing, education and consulting needs.

All Terabots are covered under our factory warranty for six months, including damage due to normal wear and tear, user error or faulty parts. Extended warranty options and maintenance plans are available up to three years.

Printing Specs

- Compatible with Mondo Hot Ends
- Supports Thermoplastics Melting Below 320°C
- 100-600 Micron Layer Resolution
- 60 mm/sec Printing Speed
- 0.25, 0.4 or 0.8 mm Nozzle Diameter
- 2.85 mm Filament Diameter

Mechanical

- Robust Aluminum Cartesian Frame
- Cast Aluminum Blanchard Ground Flat Build Plate

Software

- Micro SD or USB File Transfer Method
- VIKI 2.0 LCD Bot Control
- Compatible with Mac, Windows and Linux OS
- G-code (.gcode) Upload File Type
- Includes Simplify3D Setting Profiles

Electrical

- 110V 60Hz 20A or 220V 50Hz 10A
- 180-320°C Extruder Temperature
- 60-115°C Build Surface Temperature

Other Solutions

DIY PARTS KIT
GIGABOT 3+

590 x 600 x 600 mm	
Price	$8,950
Enclosure	$2,950

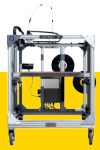

FULLY ASSEMBLED
GIGABOT 3+

590 x 600 x 600mm	
Price	$11,950
Enclosure	$2,950

FULLY ASSEMBLED
GIGABOT XLT

590 x 760 x 900mm	
Price	$16,995
Enclosure	$3,500

FULLY ASSEMBLED
EXABOT

762 x 762 x 1,829 mm	
Price	$85,000
Enclosure	*Call for price

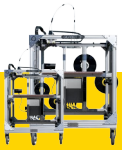

FULLY ASSEMBLED
Custom Solutions

Our team of experts are available to quickly fabricate a Gigabot that fulfills your unique size & material requirements.

1100 Hercules Ave, Suite 220, Houston TX 77058 | www.re3d.org | sales@re3d.org | 512.730.0033 | Assembled in the USA